ÖZTUĞ OTOMOTİV

WELLCOME

Ekim 2020

INFORMING

WEAR SAFETY SHOES

WEAR WORK VEST

WEAR EAR-MUFF

- Oztug Otomotiv staff will provide all information to visitors and accompany them during the visit.
- Taking photos and videos in the plant is subject to management permission.
- In a possible emergency,fallow the instructions of the person accompaying to you.When you heard the alarm sound, stay calm. Alarm may represent the time of break.Please go to the emergency meeting point as soon as posibble with the warning and supervision of your companion.
- Oztug emergency meeting point is around the security entrance.
- Follow the internal Covid-19 precaution.Keep your social distance and please do not take of your mask.

OZTUG FROM PAST TO THE PRESENT

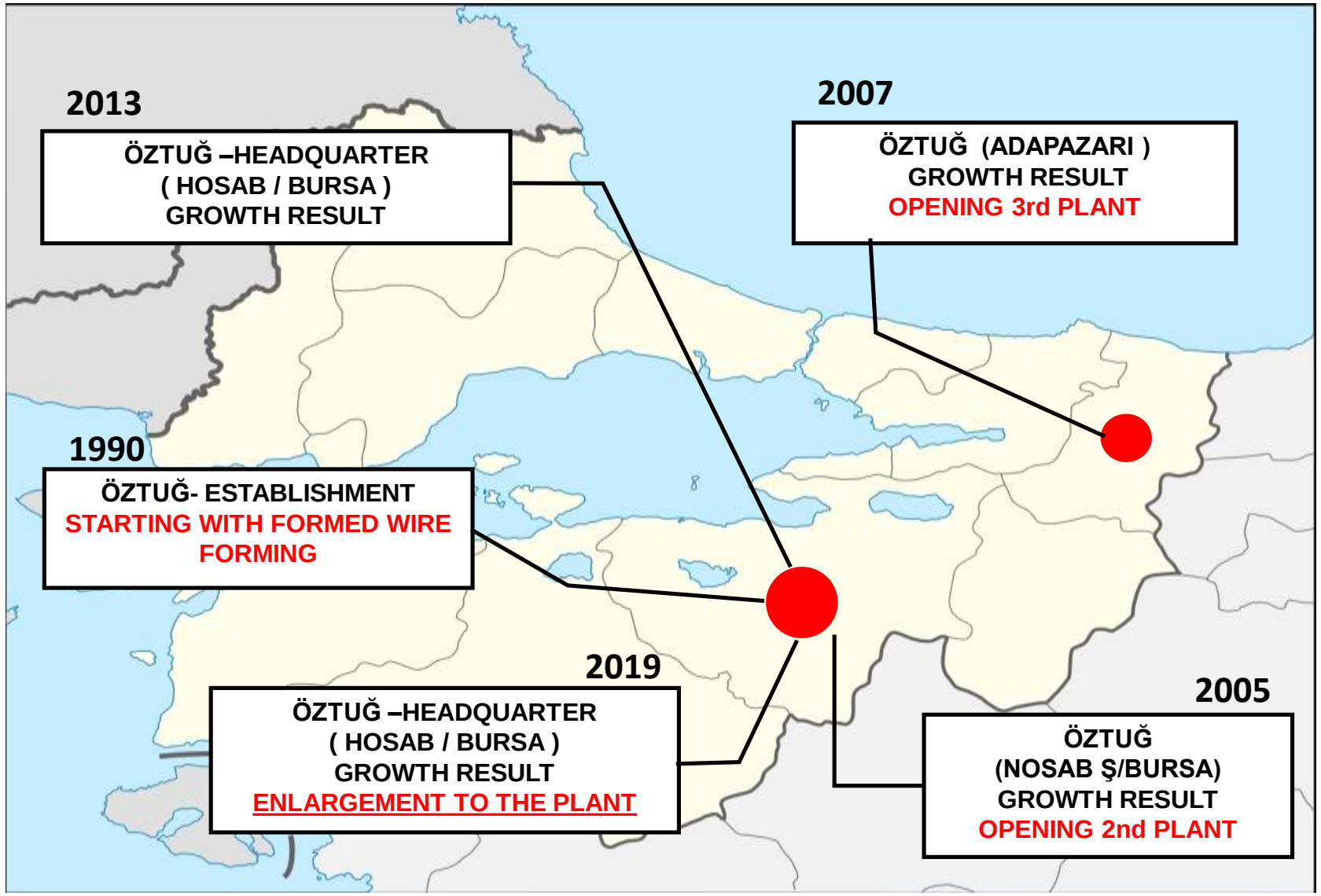

In 1990 2 We are countinuing our work with 276 personel.

ABOUT US

- 1990- Esatablishment; machine-free prodcution was realized.
- 1997- Rubber machinery investments were made.
- 2002- Toolshop investment was made.
- 2003- Plastic Injection investment was made.
- 2005- Production started in NOSAB.
- 2006- ISO TS 9001 Certificate was obtained.
- 2007- Production started in Adapazarı.
- 2011- ISO TS 16949 Certificate was obtained.
- 2013- Production started in HOSAB.
- 2018- IATF 16949 Certificate was obtained.
- 2018- Lean management working was started.
- 2018- ‘’design Center Approval’’ was obtained from the Ministry of Science,Industry and Technology.

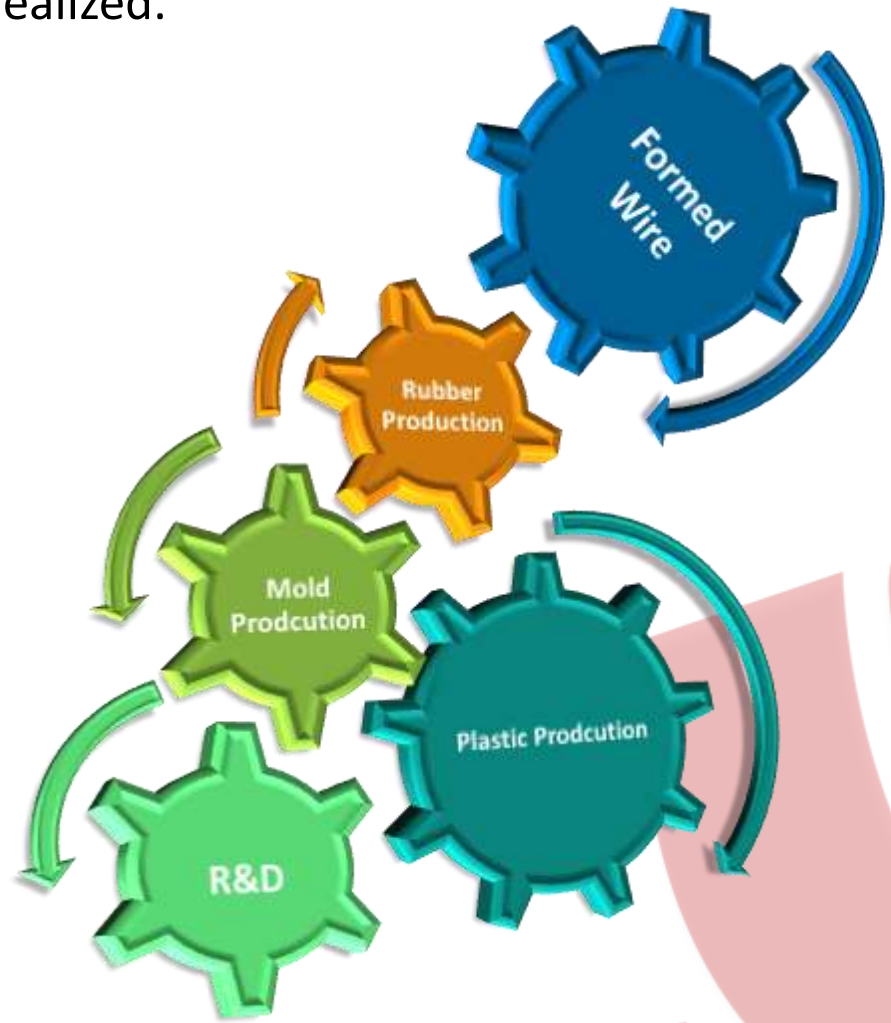

ÖZTUĞ OTOMOTİV

VISION

To create our products with our lean management by making small and medium sized plastic, rubber and wire parts, plastic injection, rubber vulcanization, CNC wire bending process that our company carries out R&D designs to the industrial sectors on the global platform and present it to the our customers with a high satisfaction level.

MISSION

To maximize our technology and design skills in the understanding of total quality and continuous improvment, to be the leader in the sector by providing the most effective and efficient service. In the globalizing World, to ensure the continuous satisfaction of all our stakeholders as one of the leading export companies in its field with its lean strategy purified from waste.

SECTORS WE SERVE

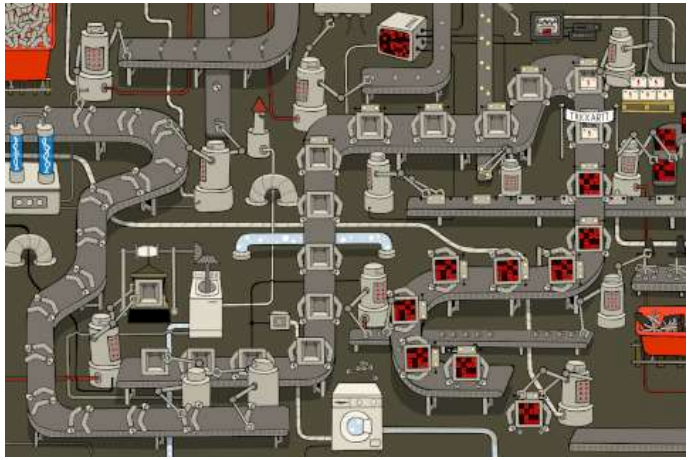

- Industrial Sectors
- Furniture
- Building
- Defence Industry
- Aviation
- After Market
- Automotive

SAMPLE PRODUCTS

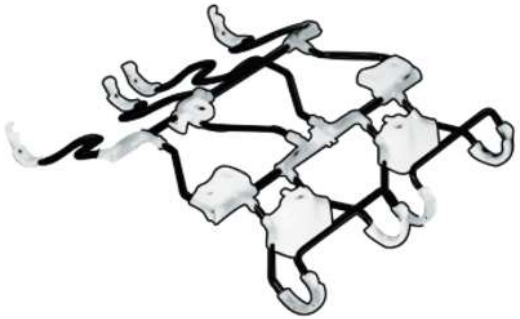

PLASTIC & RUBBER OVERMOLD PARTS

SAMPLE PRODUCTS

ASSAMBLED &
TAMPON PRINT PARTS

SAMPLE PRODUCTS

PLASTIC PARTS

SAMPLE PRODUCTS

OVERMOLD & CO-INJECTION PARTS

ÖZTUĞ OTOMOTİV

SAMPLE PRODUCTS

RUBBER PARTS

ÖZTUĞ OTOMOTİV

SAMPLE PRODUCTS

WIRE PARTS

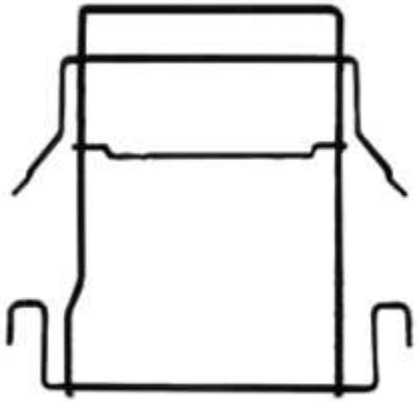

PLASTIC GROUP

- Machine tonnage capasity - 50 tons - 600 tons
- Maximum table size - 835 x 835 x 880 mm.
- Maximum production volume 2500 cm³
- Dehumidificaiton systems - On-machine dehumidification/Gel dehumidification
- We serve for plastic production with totaly 47 injection machine and %90 of them is Arburg branded.

RUBBER GROUP

- Machine tonnage capacity 60 tons - 250 tons
- We serve with;
- 5 pcs. Rubber Injection Machine
- 23 pcs.Rubber Vulcanisation & Compression Machine

- **WIRE & SHEET METAL GROUP**

We serve with;

6 pcs. wire bending machine which 2 of them are designed and manufactured by OZTUG

Sheet metal forming press capasity is 20 tons - 250 tons (5 pcs. Eccentric Presses)

CNC 4 axis spot welding machine/ABB Gas arc welding machine/Lenght finishing machine/ Tube bending machine/CNC drilling machine which designed & manufactured by OZTUG

MEASURMENT CAPABILITIES

- 3-D Scaning (GOM ATOS/CMM DEA)
- Profile Projection
- Tensometer (Pull – Breakage)
- Rheometer
- Agining Cabin (ETÜV)
- Hardness Measurment
- Density Measurment
- Coating Thickness Measurment
- Flammability
- Glossmeter
- DSC Test
- Humidity Rate Measurment
- IRHD Micro Hardness Maesurment
- Surface Roughness Measurment
- Force Measurment

SPECIAL PRODCUTION CAPABLITIES

Front Cushion Seat
Prodcution Line

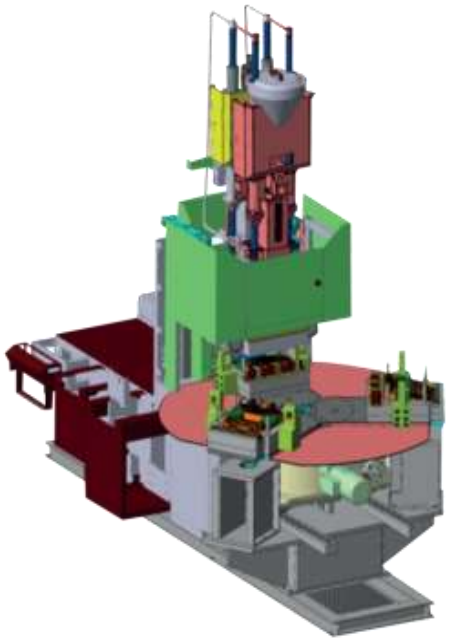

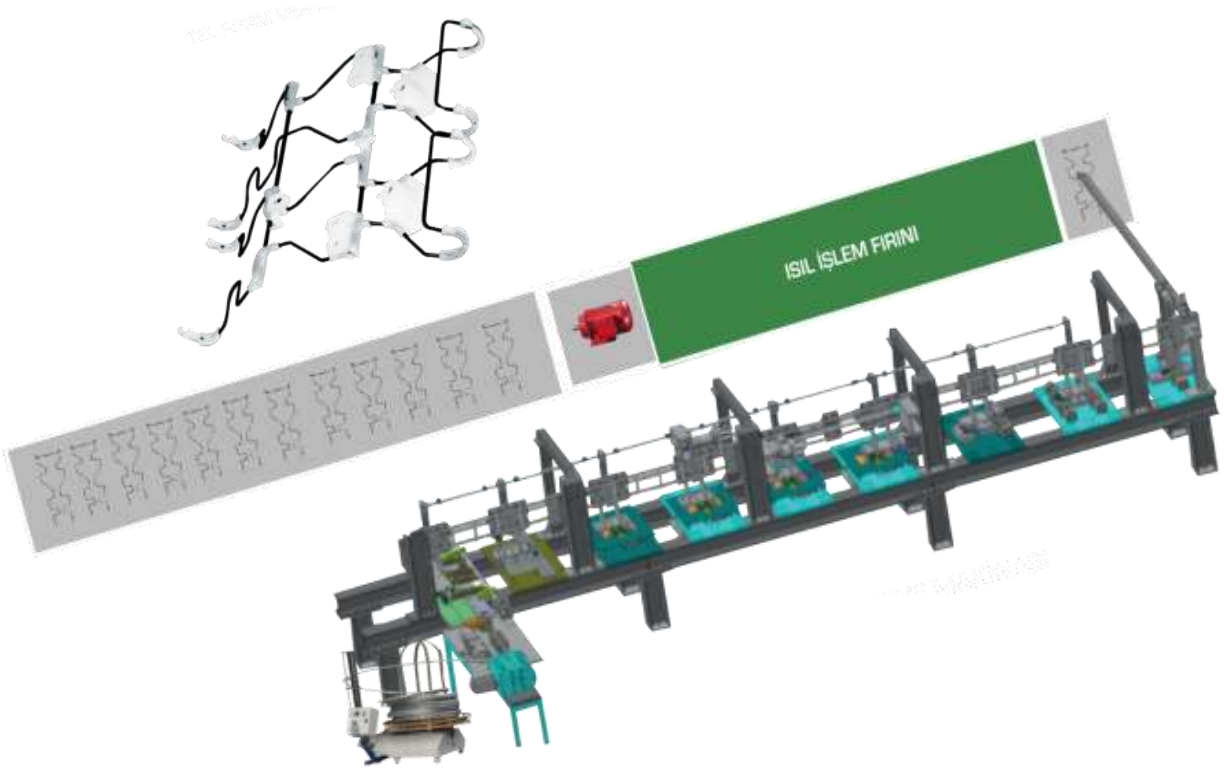

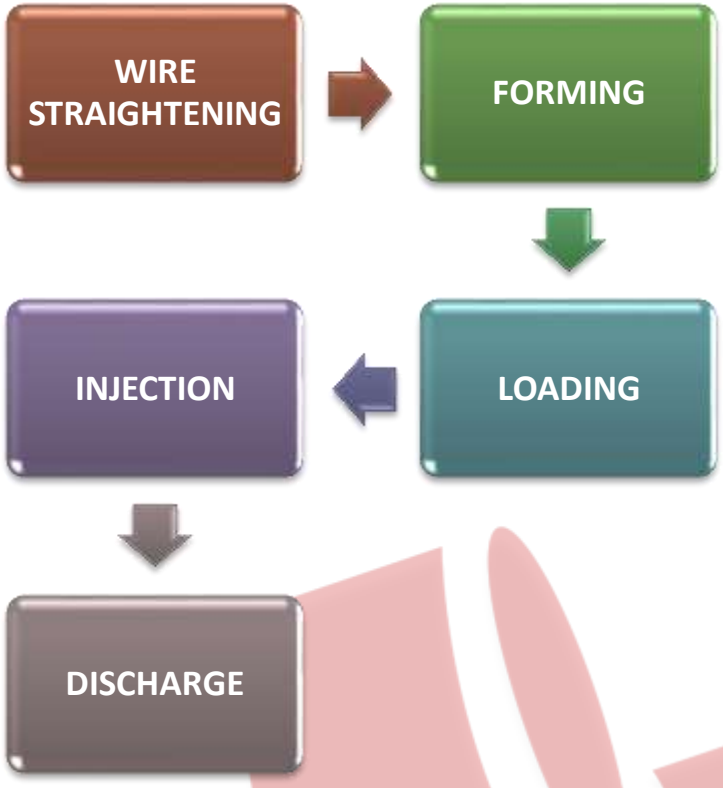

SPECIAL PRODCUTION CAPABLITIES

CO-INJECTION LINE CREATED BY OZTUG AUTOMOTIVE WITH ITS OWN R&D

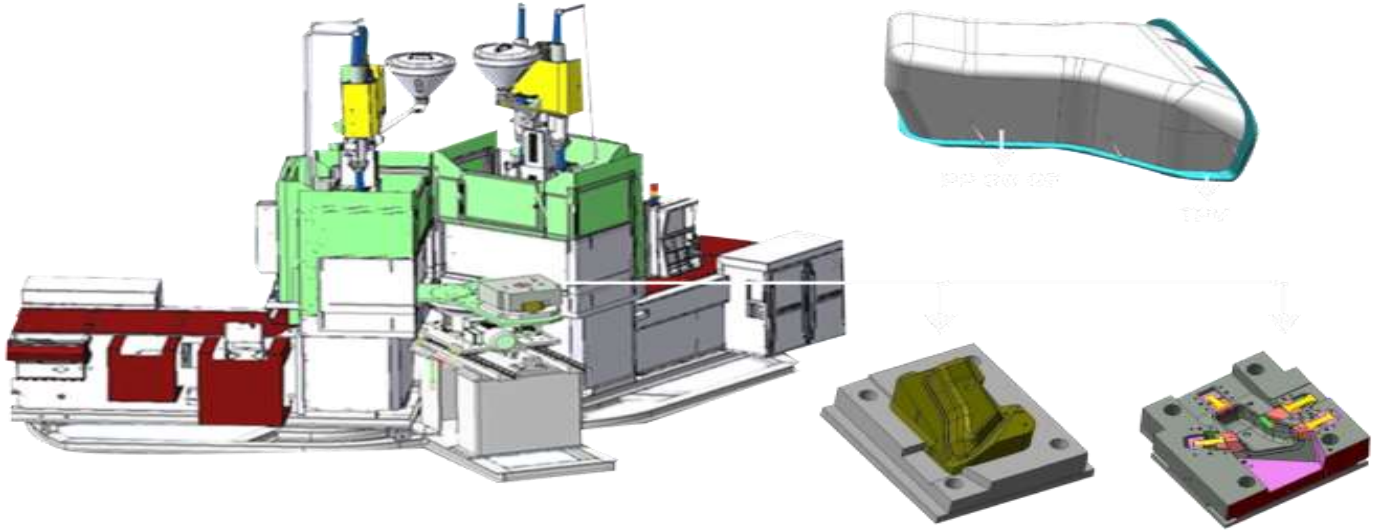

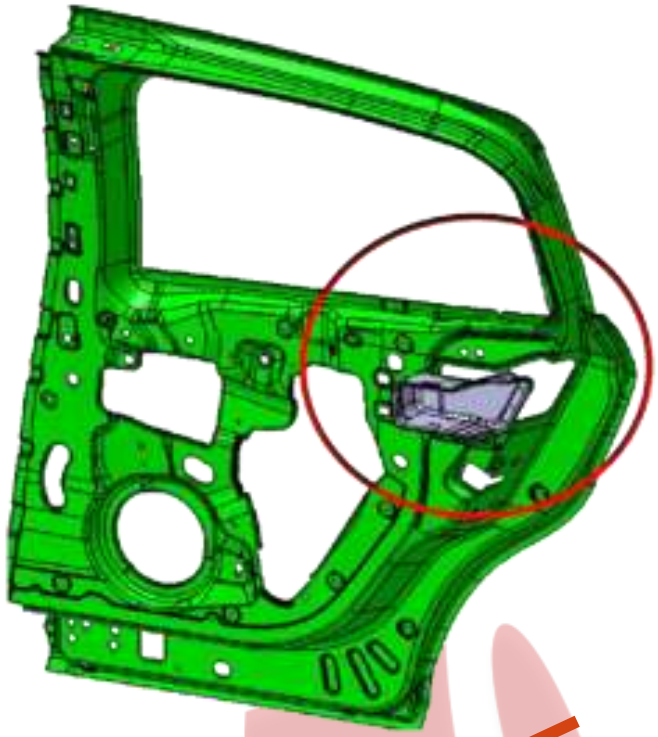

~~If the manufacturing is supplied from outside 700.000 €~~

Cost of results within Oztug
300.000 €

MOLD MANUFACTURING

- PLASTIC MOLD
- RUBBER MOLD
- SHEET METAL MOLD
- CONTROL FIXTURE
- WELDING FIXTURE
- ASSAMBLY FIXTURE
- SPECIAL MACHINE & APARATUS DESIGN
- MOLD SURFACE POLISHING

hyperMILL

VISI

ESPRIT

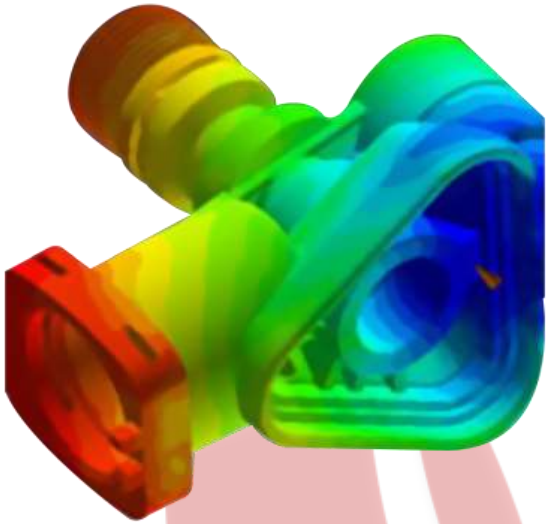

MOLD MANUFACTURING GROUP

We serve with 24 pcs. machine that;

- Maximum table size 2000 x 1200 x 1000-6 pcs. **3 Axis Vertical Processing Bench**
- Maksimum tabla ebatı 850 x 700 x 500-3 Adet **5 Axis Hermle Processing Bench**
- **Wire Erosion / CNC Sinking Erosion/CNC Lathe /Laser Welding and Marking / Deep-hole drilling and Surface grinding**

ÖZTUĞ OTOMOTİV

SAMPLE MOLD/ APARATUS / CF

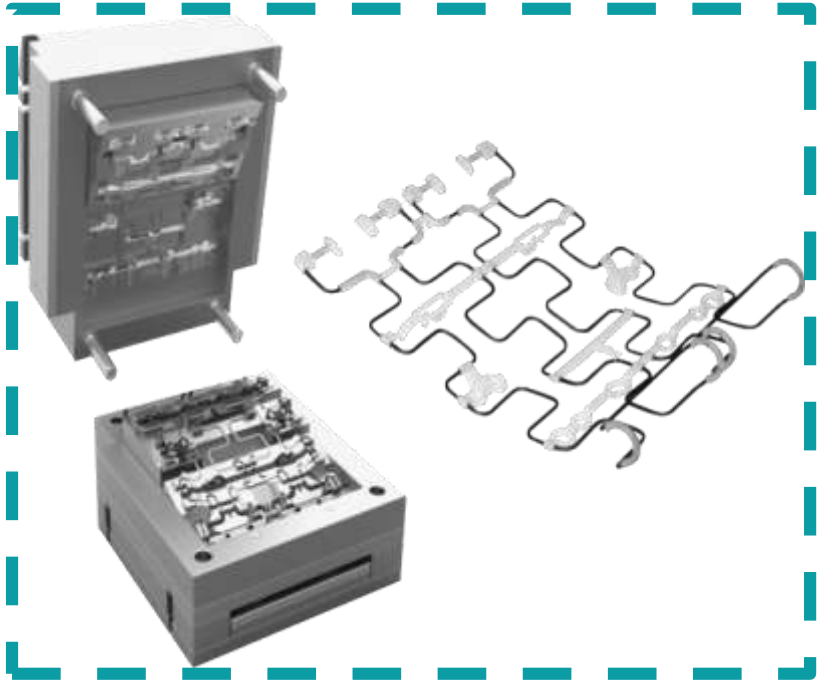

QCD AWARDS

→DELIVERY
- Toyota Boshoku Türkiye -2010
- Toyota Boshoku Türkiye -2013

→QUALITY
- Toyota Boshoku Türkiye -2012
- Toyota Boshoku Türkiye -2013
- Toyota Boshoku Eurpoe -2019

→COST
- Toyota Boshoku Türkiye -2010
- Toyota Boshoku Türkiye -2011
- Toyota Boshoku Türkiye -2016

SATISFACTION AWARDS

Our founder Mr.Erol Çelik was awarded by Toyota Boshoku Turkey for 20 years business and partnership.

→**The Most Successful Supplier**
Martur-2011

→**PROJECT MANAGEMENT TBT**-2017

→**R&D 2.**
BTSO-2017

CUSTOMER SATISFACTION IMPROVMENT STUDIES

With Value-Stream Map-Based Improvements,

In Work Security

In Quality

In Prodcutivity

Compotitive Advantage

At Stock Turnover

On Delivery

Capasity Improvements

GROWTH TREND

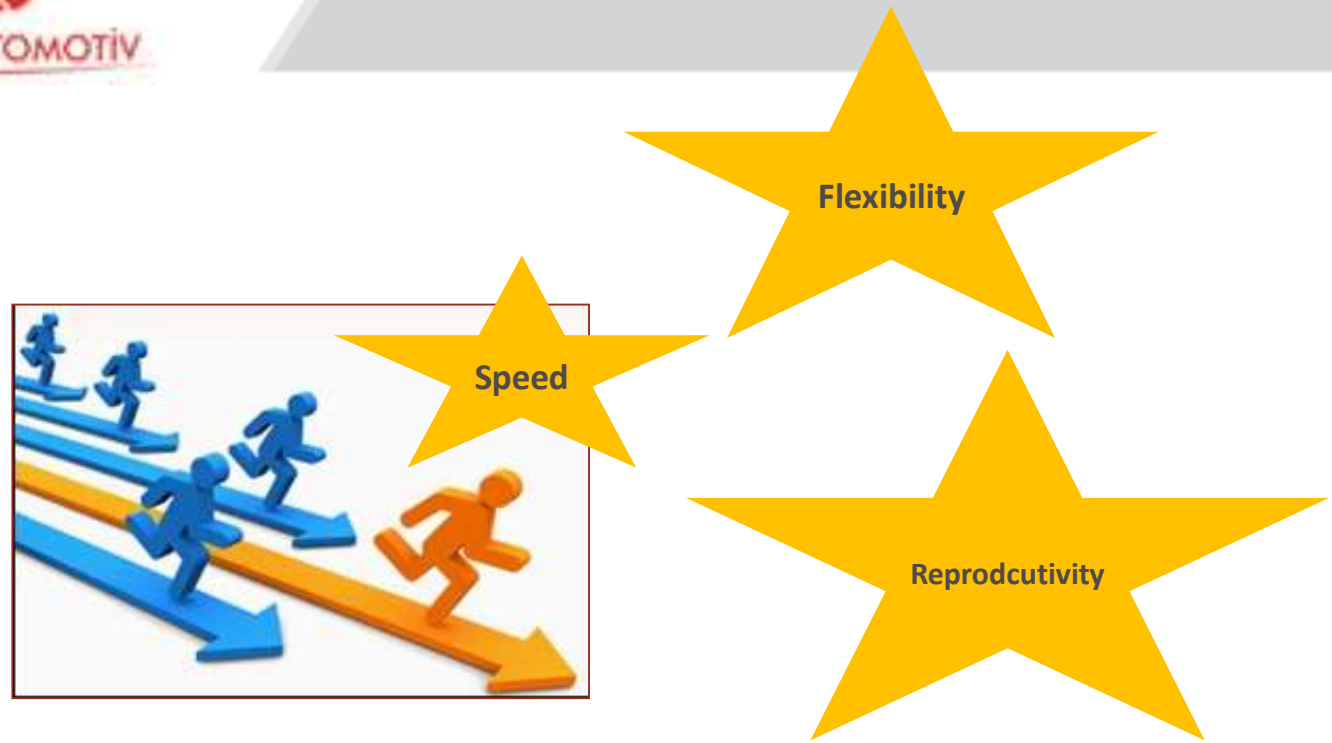

Correct Method ➔ Using with lean management systems

Correct Vision➔ With an unlimited devolopment strategy

Correct Human Resource➔ Devolopment of competent / Ready / correct staff network

Correct Substructure➔ Focused on Industry 4.0

With Industry 4.0 Studies;

In all areas of prodcution,

In all Logistical applications,

We will carry out processes where quality will be managed with smart autonomy.

We will create smart value chains..

GROWTH TREND

- “In the next 10 to 20 years, about %47 of the jobs we know now will disappear due to technological devolopment.”

Carl Benedikt Frey & Michael Osborne (Oxford University)

The Dijital revulation not only **“touches”** every point of our lives,but also **“shapes”**it..

OZTUG WITHIN HIGH TECHNOLOGY PRODCUTS

For permanent value and work safety

For more productivity and higher living standart

ÖZTUĞ OTOMOTİV

For growth and stability

Industry 4.0

OUR EXPORT CUSTOMERS

GERMANY
Sew Eurodrive
Rt-Filtertechnik
Webasto Convertibles
Stabilus
Wet
G Elbe&Sohn
Conductix - Wampfler
Hydac - Filtertechnik
Dynatect-Halltech
Terraplastik
Höhl
Dietrich Teigler
Steinbock
Ökümenisches Gemeinschaftswerk
Riplast
Behringer
Happich
Alptal
Argu

TURKEY + BELGIUM + RUSSIA + FRANCE
Toyota Boshoku
TBT - TBEU –TBR - TBSO

GERMANY + SLOVAKIA + ITALY
Webasto Convertibles

GERMANY + ROMANIA + MEXICO
Stabilus

GERMANY + FRANCE
Sew Usocome

AUSTRIA
Seal Maker

POLAND
Autostop - Purtec

HUNGARY
ERT

ÖZTUĞ OTOMOTİV

REFERENCES

HYUNDAI
KIRPART
aselsan
BMC POWER
Motor ve Kontrol Teknolojileri A.Ş.
ISUZU
TOYOTA BOSHOKU
Rollmech automotive
disa AUTOMOTIVE
MARTUR
Automotive Seating Systems
fkt
Innovative Sitzlösungen
TÜBİTAK
haksan
BOSCH
Automotive
GRAMMER
ATERMIT
automotive
TREDIN
TEXTILES & SEAT COMPONENTS
SUMITOMO RIKO GROUP
SumiRiko Italy S.p.A.
Pimsa Otomotiv
SEW EURODRIVE
STABILUS
SEW USOCOME
RTFILTER TECHNIK
HYDAC
webasto
CONDUCTIX wampfler
Dietrich Teigler Nachf. GmbH & Co KG
Kautschuk- und Kunststofftechnik
elbe
elso
Die Unternehmen der Elbe Group
HAPPICH
A Pelzer Family Company
DYNATECT
Seal Maker
The system for flexible seal production